HS22A

Encoder Module

Feature

- Mini Encoder Bore Diameter 4.0mm
- Compact Size Easy Assembly
- Low Cost
- Wafer Handling Machines
- Vending Machines
- OA mini DC Motor or Stepping Motor

Absolute Maximum Ratings

Storage Temp.	-40 ~ +85℃
Operating Temp.	-20 ~ +85℃
Supply Voltage	4.5 ~ 5.5V
Output Voltage	VoH: Vcc – 0.7V, VoL: 0.4V
Output Current per Channel	5mA
Response Frequency	30 KHz

Resolution

200, 256

Block Diagram

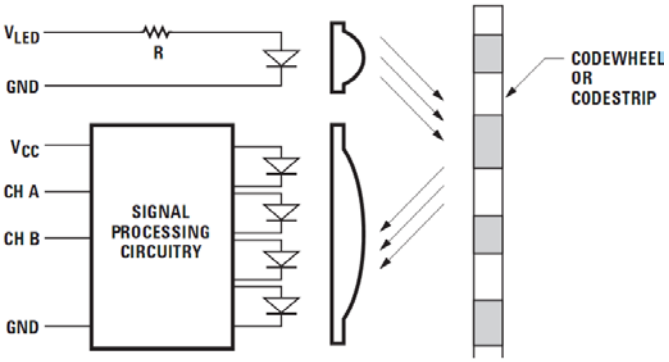

Output Waveform

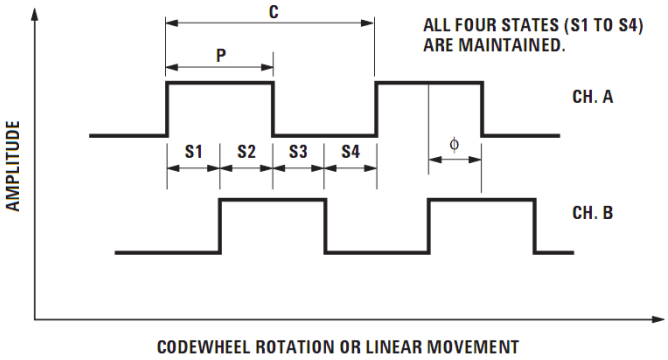

Ordering Information

HS22A –	Bore Diameter	–	Resolution P/R	–	Output Mode	–	Output Phase	–	Power Source
	4: Φ4mm		200, 256		V: Voltage		2: A, B phase 3: A, B, Z phase		5: DC 5V

Copyright © 2009 HONEST SENSOR
info@honestsensor.com www.honestsensor.com

Package Dimension (Unit: mm)

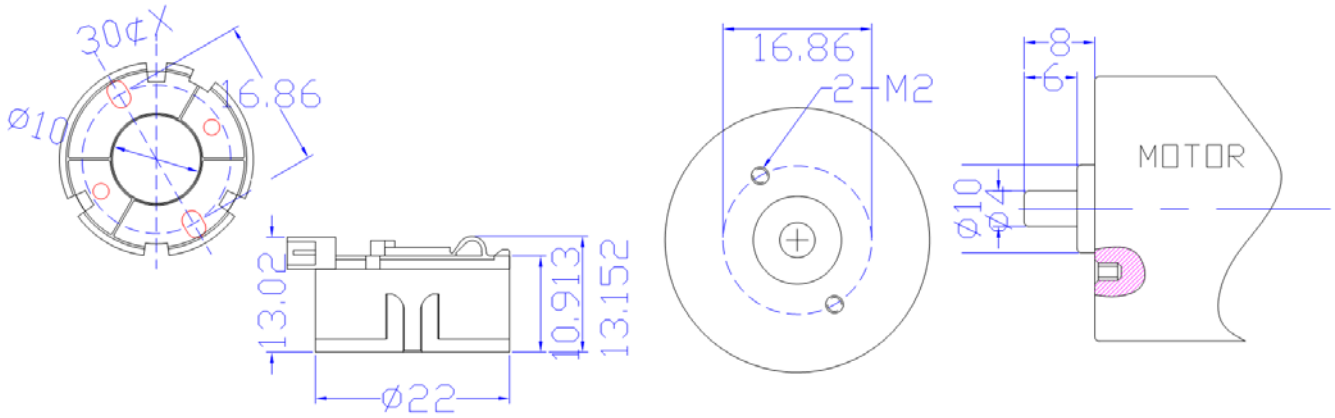

Copyright © 2009 HONEST SENSOR
info@honestsensor.com www.honestsensor.com